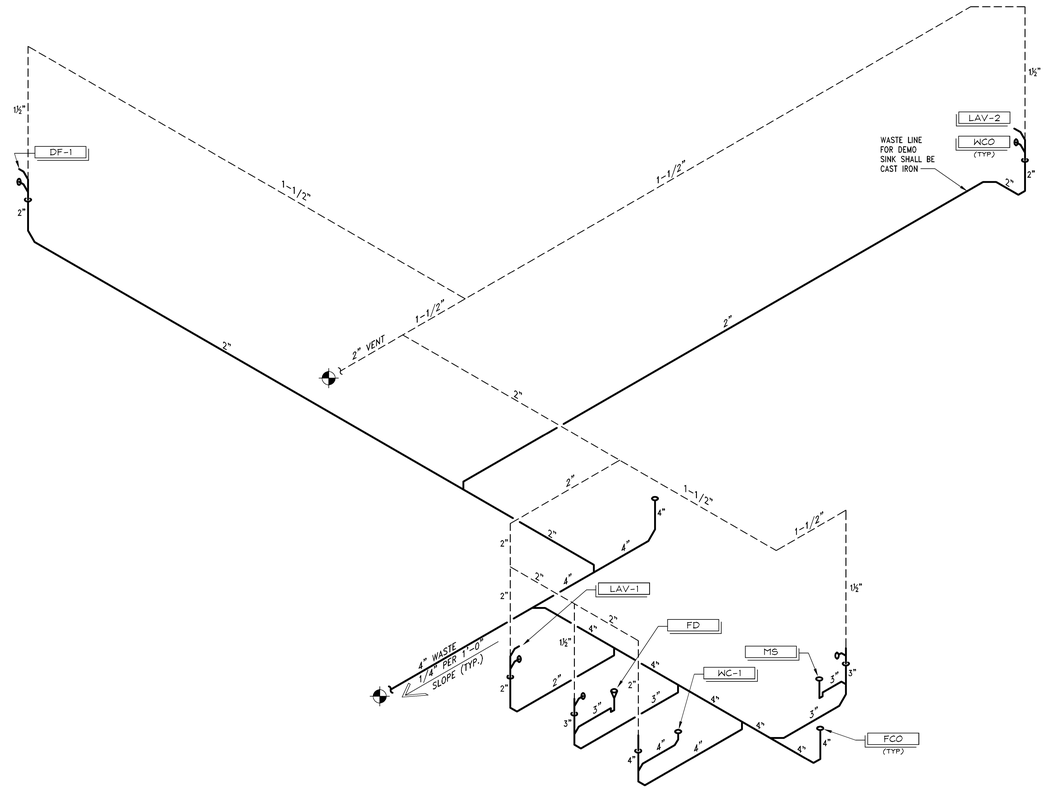

WASTE & VENT PIPING DIAGRAM

NTS

-

C

11/11/11

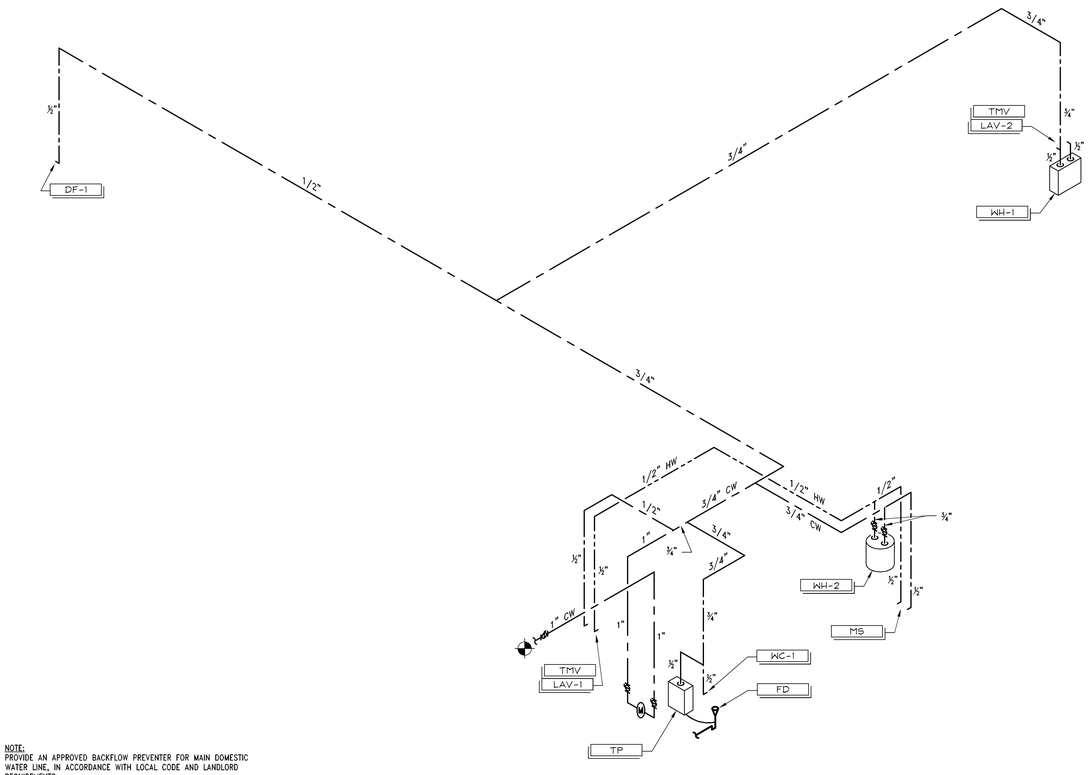

NOTE:
PROVIDE AN APPROVED BACKFLOW PREVENTER FOR MAIN DOMESTIC WATER LINE, IN ACCORDANCE WITH LOCAL CODE AND LANDLORD REQUIREMENTS.

DOMESTIC WATER PIPING DIAGRAM

NTS

-

A

11/11/11

LARSON BINKLEY

Larson Binkley, Inc.
310 W 20th Street, Suite 200
Kansas City, Missouri 64108

Texas Certificate of Authorization Number F-1367

T 816-997-9601
F 816-997-9602
larsonbinkley.com

Limitedbrands

LIMITED STORE PLANNING, INC.
d/b/a STORE DESIGN & CONSTRUCTION
Three Limited Parkway · Columbus, Ohio 43230
Telephone: 614.415.7000 · Fax: 614.415.7349

PROHIBITION OF REUSE:
THESE DRAWINGS AND SPECIFICATIONS ARE PREPARED FOR USE ON A PROJECT SITE COMPLETELY IN ACCORDANCE WITH THESE DRAWINGS AND SPECIFICATIONS. THEY ARE NOT INTENDED FOR USE ON A DIFFERENT PROJECT WITH THESE SITE DATA